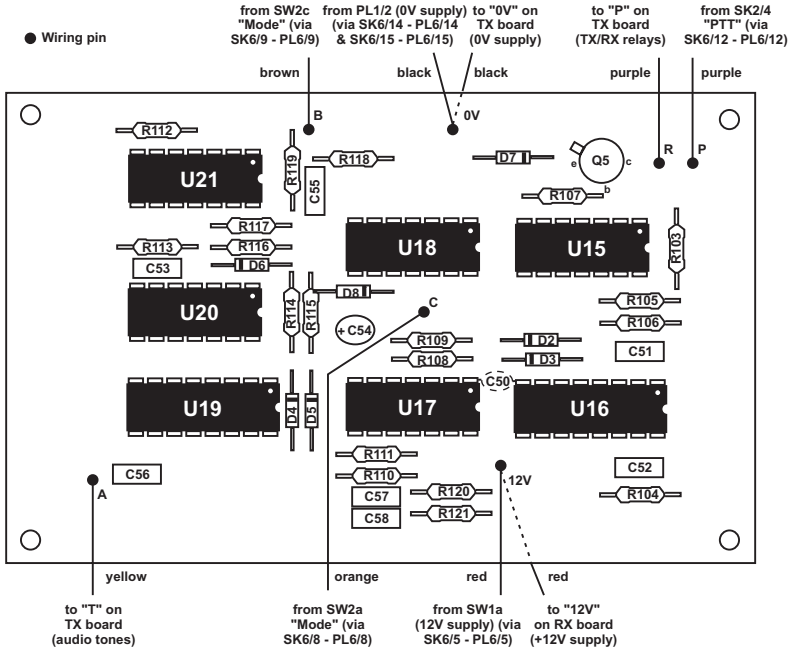HeyPhone Control Board
Issued 28-Apr-04